CPA Series

CABINET FAN

Cabinet Fan - **CPA Series**

KRUGER

Construction

- *Cabinet is manufactured in galvanised sheet steel incorporated with a direct driven axial flow fan – TDA-L Series.*
- *The impeller having manually adjustable pitch blades is made of PPG, PAG, or pressure-casted aluminium.*
- *Removable access door for easy accessibility to fan.*
- *Easy installation*
- *Noise reduction and acoustic lining available upon request.*

Motor

- *Totally enclosed Class F motor, to a min. IP54 protection are fitted as standard. Standard motor up to 2.2 kW supplied on are usually DOL starting, motor 3.0 kW and above are star/delta starting.*

Airflow Direction

- *Air flowing from impeller to motor (B) are fitted as standard. Air flowing from motor to impeller (A) can be supplied upon request*

Dimensions

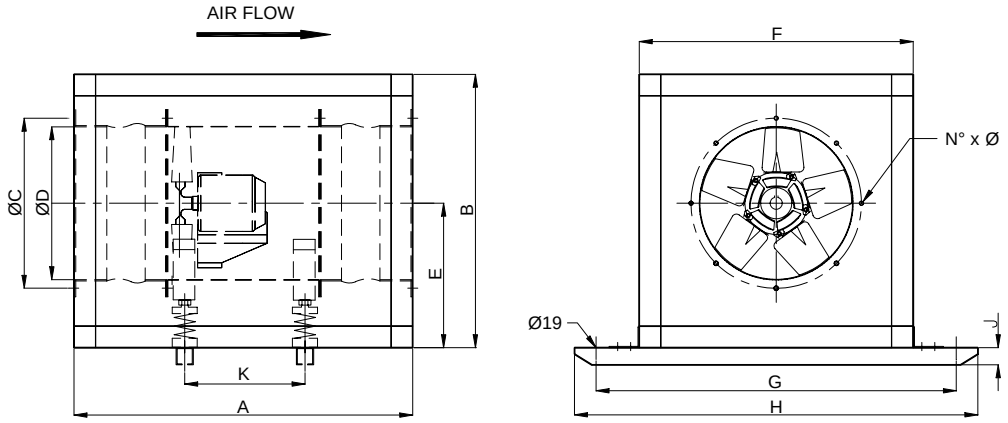

All Dimension in mm.

Model	A	B	C	D	E	F	G	H	J	K	N x Ø	*Kg	*Motor Framesize
CPA 315	790	595	355	315	297.5	595	795	895	40	304	8 x 10	53	D71
CPA 355	790	635	395	355	317.5	635	835	935	40	304	8 x 10	62	D80
CPA 400	790	680	440	400	340	680	880	980	40	304	12 x 10	68	D90S
CPA 450	830	730	490	450	365	730	930	1030	40	340	12 x 10	79	D90L
CPA 500	930	780	540	500	390	780	980	1080	50	430	12 x 10	102	D90L
CPA 560	930	860	605	560	430	860	1060	1160	50	430	12 x 10	121	D112M
CPA 630	930	930	675	630	465	930	1130	1230	50	430	12 x 10	135	D112M
CPA 710	930	1010	755	710	505	1010	1310	1410	80	430	18 x 12	197	D112M
CPA 800	990	1100	845	800	550	1100	1400	1500	80	550	18 x 12	250	D132M
CPA 900	1060	1200	945	900	600	1200	1500	1600	80	550	18 x 12	307	D160M
CPA 1000	1060	1300	1050	1000	650	1300	1600	1700	80	630	18 x 12	419	D160M
CPA 1120	1350	1450	1185	1120	725	1450	1750	1850	100	750	18 x 12	618	D225M
CPA 1250	1450	1580	1315	1250	790	1580	1880	1980	100	850	18 x 12	752	D250M

* The weight without motor, impeller & vibration isolator.
* Motor framesize beyond this range, please consult Kruger for details.

KRUGER VENTILATION INDUSTRIES PTE LTD - No. 17 Tuas Avenue 10 - Singapore 639141 - Tel +65 68611577 - Fax+65 68613577
The company is always improving & developing its products, therefore the company reserve the right to make changes to the illustrated products. Certified dimension will be provided upon request.